Manitowoc

Foodservice

Parts Manual

For more Parts Information:
https://manitowocfsg.sysonline.com/Default.aspx

TABLE OF CONTENTS

Manitowoc Foodservice [Updated: Sep. 30, 2013]
Manitowoc - Ice & Related
Parts Catalog
Ice Machine
S Series
S Model - Air, Water & Remote
S0420
S0420 Control Box 1
S0420 Evaporator Compartment 4
S0420 Refrigeration Compartment – Common Components 6
S0420 Refrigeration Compartment - Air-cooled Components 9
S0420 Refrigeration Compartment - Water-cooled Components 11
S0420 Panels 13

S0420 CONTROL BOX

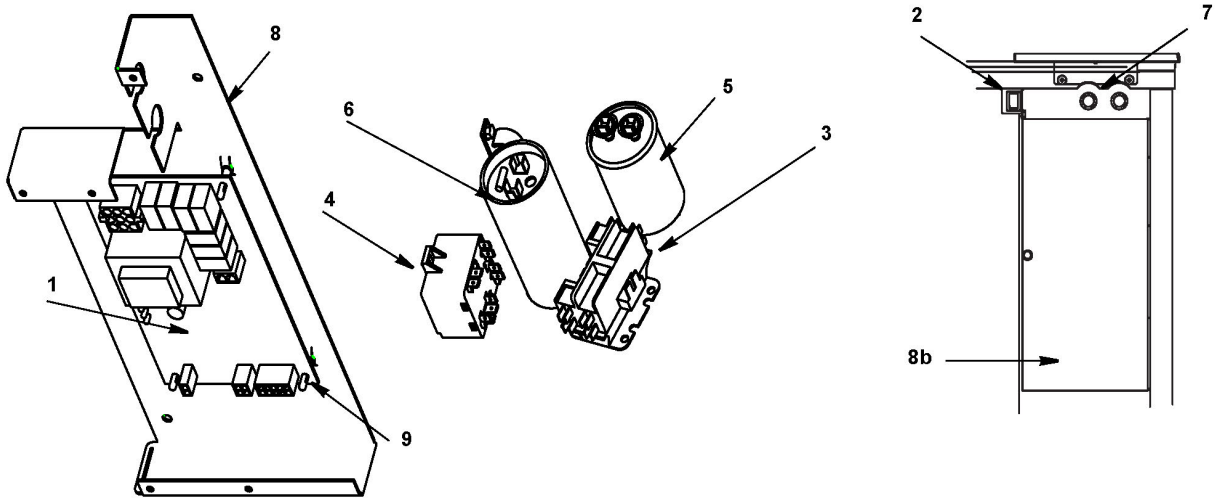

S0420 CONTROL BOX

#	PART #	DESCRIPTION	QTY	Note
1	2006199	Control Board		
1a	000008240	7 Amp Fuse - Mounted on Control Board		
2	2007939	Toggle Switch		
2a	2008079	Toggle Switch Wiring Harness		
2b	4011639	Toggle Switch Box		
3		Contactor		
3a	2006589	Contactor - 115V/60 Hz/1 Ph		
3b	2006599	Contactor - 230V/50-60 Hz/1 Ph		
4		Start Potential Relay		
4a	2002053	Start Potential Relay - 115V/60 Hz/1 Ph		
4b	2007929	Start Potential Relay - 208-230V/50-60 Hz/1 Ph		
4c	2007639	Start Potential Relay - 208-230V/50-60 Hz/1 Ph		[1]
5		Compressor Run Capacitor		
5a	2010143	Run Capacitor - 115V/60 Hz/1 Ph		
		Run Capacitor - 208-230V/50-60 Hz/1 Ph - See Note for Serial Break		
5b	8504003	Run Capacitor - 208-230V/50-60 Hz/1 Ph		[2]
5c	2009493	Run Capacitor - 208-230V/50-60 Hz/1 Ph		[3]
5d	8504003	Run Capacitor - 208-230V/50-60 Hz/1 Ph		[4]
6		Start Capacitor		
6a	8505773	Start Capacitor - 115V/60 Hz/1 Ph		
6b		Start Capacitor - 208-230V/50-60 Hz/1 Ph - See Note for Break		
6c	8503703	Start Capacitor - 208-230V/50-60 Hz/1 Ph		[5]
6d	8503833	Start Capacitor - 208-230V/50-60 Hz/1 Ph		[4]
7	8373263	Refrigeration Service Valve Assembly		
8	6063909	Control Box		
8a	7602739	Control Box Side Cover		
8b	7602153	Control Box Cover		
9	4302253	Control Board Mounting Supports		
10	2500169	Bushing - 0.91" OD x 0.44" ID		
11	6063949	Start Components Electrical Box		
11a	7602729	Start Components Electrical Box Cover		
12	5005309	Capacitor Mounting Bracket		
13	5202169	Screw - #10-24 x 0.50" Ground		
13a	5573209	Star Washer		
14	5202069	Screw - #10-24 x 0.50" HEX		
15		Control Box Wiring Harness		
15a	2008599	Control Box Wiring Harness - 115V/60 Hz/1 Ph		
15b	2008609	Control Box Wiring Harness - 230V/60 Hz/1 Ph		
15c	2008619	Control Box Wiring Harness - 230V/50 Hz/1 Ph		

PART NOTES:

[1] - 60 Hz OnlyDanfoss SC18MLX.3 - Before Serial Number 110667970

S0420 CONTROL BOX

#	PART #	DESCRIPTION	QTY	Note

PART NOTES:

[2] - Danfoss SC15MLX.2 - Before Serial Number 110667970
[3] - Danfoss SC18MLX.3 - Before Serial Number 110667970
[4] - After Serial Number 110667970
[5] - Before Serial Number 110667970

S0420 EVAPORATOR COMPARTMENT

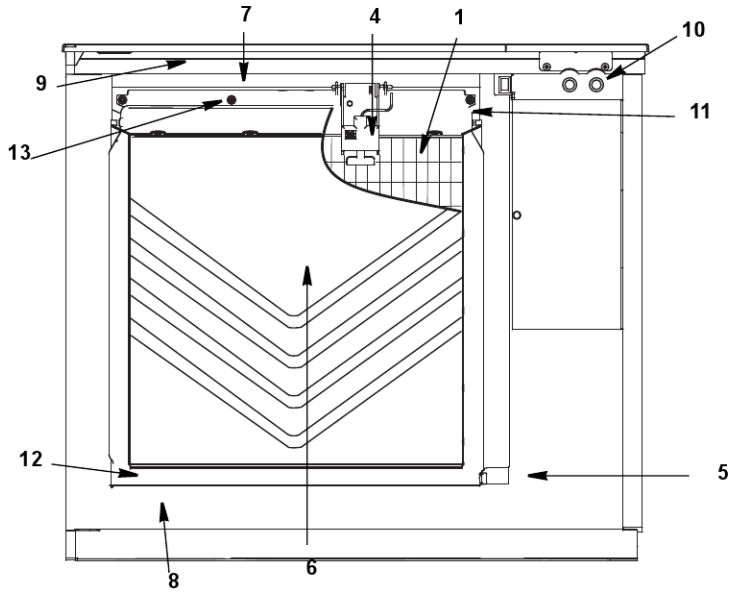

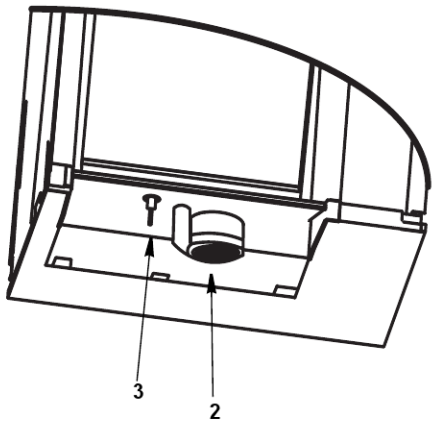

S0420 EVAPORATOR COMPARTMENT

#	PART #	DESCRIPTION	QTY	Note
1		Evaporator Assembly		
1a	7602769	Evaporator - Dice Cube		
1b	7602759	Evaporator - Half Dice Cube		
1c	7602749	Evaporator - Regular Cube		
2		Water Pump		
2a	2008929	Water Pump - 115V/60 Hz		
2b	2008939	Water Pump - 230V/60 Hz		
2c	2008949	Water Pump - 230V/50 Hz		
3	2006549	Water Level Probe		
3a	2007989	Wire - Control Box to Probe		
4	2008029	Ice Thickness Control Probe		
5	000007888	Magnetic Bin Switch		
6	4011189	Water Curtain		
7	7602789	Water Distribution Tube - 22" Models		
7a	5004649	O-Rings		[1]
8	4009149	Water Trough - without Tabs		[2]
9	6065389	Evaporator Top Filler Panel		
9a	6063339	Bracket - Top Filler Panel		
9b	5202099	Screw - #10-24 x 0.50" PHIL		
10	8373263	Refrigeration Service Valve Assembly		
11	7602799	Evaporator Top Frame Assembly		
12	7602779	Water Diverter - 22" Models		
12a	5305123	Thumbscrew SS - #8-32 x 0.44"		
13	5004799	Thumbscrew SS - #8-32 x 0.375"		[3]
13a	5004629	O-Ring - 0.125" ID		
14	5004619	Screw - #12-16 x 0.687"		[4]
15	5004659	Water Pump Base O-Ring - 4.00" ID		
16	5004679	Water Pump Outlet O-Ring - 0.875" ID		
17	000001382	Vinyl Tubing 0.625" ID		[5]
17a	6038831	Insulation 0.88 ID X 0.25W X 13.50L		

PART NOTES:

[1] - Back of Distribution Assembly
[2] - \water trough.jpg" width=311 height=143>
[3] - Water Distribution Tube Mounting
[4] - Used to Mount Evaporator
[5] - dump valve to drain adapter

S0420 REFRIGERATION COMPARTMENT – COMMON COMPONENTS

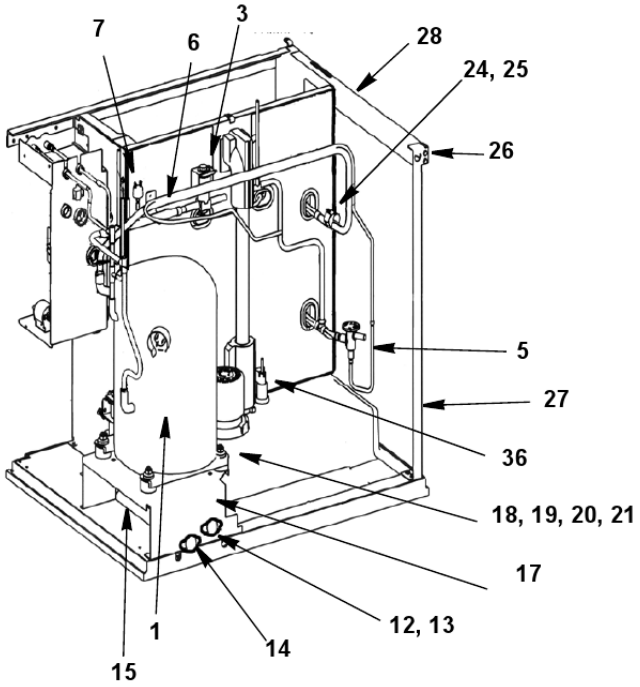

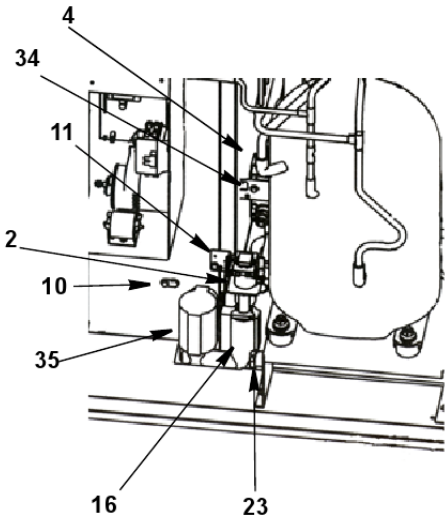

S0420 REFRIGERATION COMPARTMENT – COMMON COMPONENTS

#	PART #	DESCRIPTION	QTY	Note
1		Compressor		
		115V/60 Hz/1 Ph		
1a	7602943	Compressor - Danfoss SC18MLX.3 - 115V/60 Hz/1 Ph		
1b	8252973	Compressor Overload - 115V/60 Hz/1 Ph		
1c	000003919	Compressor - Danfoss SC15MLX.2 - 115V/60 Hz/1 Ph		
1d	8251403	Overload - 115V/60 Hz/1 Ph		
		208-230V/60 Hz/1 Ph		
1e	7602953	Compressor - Danfoss SC18MLX.3 - 208-230V/60 Hz/1 Ph		
1f	000003920	Compressor - Danfoss SC15MLX.2 - 208-230V/50-60 Hz/1 Ph		
		208-230V/50 Hz/1 Ph		
1g	7602963	Compressor - Danfoss SC18MX.3 - 208-230V/50 Hz/1 Ph		
1h	000003920	Compressor - Danfoss SC15MLX.2 - 208-230V/50-60 Hz/1 Ph		
2		Water Dump Valve		
2a	000001767	Water Dump Valve - 115V/60 Hz		
2b	000001768	Water Dump Valve - 208-230V/50-60 Hz		
3		Harvest Valve Including Electrical Coil		
3a	7630011	Danfoss Solenoid Valve With Coil - 115V/60 Hz		
3b	7630071	Danfoss Solenoid Valve With Coil - 208-230V/50-60 Hz		
		Harvest Valve Coil Only		
3c	000005156	Danfoss Solenoid Valve Coil Only - 115V/60 Hz		[1]
3d	000005157	Danfoss Solenoid Valve Coil Only - 230V/50-60 Hz		[2]
4		Water Inlet Valve with Coil		
4a	000007965	Water Inlet Valve - 115V/60 Hz/1 Ph		
4b	000007966	Water Inlet Valve - 208-230V/50-60 Hz		
5		Expansion Valve - See Note for Serial Break		
5a	7602869	Expansion Valve		[3]
5b	7602903	Expansion Valve		[4]
5c	4013299	Valve Insulation Boot - Body		
5d	4007203	Valve Insulation Boot - Bulb		[5]
6	000008364	Manifold Strainer		
7	2001243	High Pressure Cut-out Control		
8		Electrical Box on Rear of Ice Machine		
8a	6063949	Start Components Electrical Box		
8b	2006143	Terminal Block - 50 Hz - 3 Pole		
8c	5202169	Screw - #10-24 x 0.50" Ground		
9		Compressor Compartment Wiring Harness		
9a	2007329	Compressor Compartment Wiring Harness - Water-cooled		
9b	2007319	Compressor Compartment Wiring Harness - Air-cooled		
10	000007888	Magnetic Bin Switch		
11	6065039	Dump Valve Mounting Bracket		
11a	5012319	Screw - #12-16 x 0.75"		
11b	5202109	Screw - #10-24 x 0.375"		

S0420 REFRIGERATION COMPARTMENT – COMMON COMPONENTS

#	PART #	DESCRIPTION	QTY	Note
12	8706093	Female Wing Adapter - 0.375"		
13	1360961	Male Connector		
14	8706083	Female Wing Adapter - 0.50"		
15	4420383	Clear Tubing - 0.625" ID		
16	4420383	Clear Tubing - 0.625" ID		[6]
17	6060261	Compressor Mounting Base		
18	5000899	Compressor Rubber Grommet		
19	5000909	Sleeve		
20	5004999	Compressor Mounting Screw 1/4-20 x 1 1/4		
21	5005009	Compressor Mounting Nut		
22	2001889	Compressor Wiring Harness		
23	5650709	Snap Clamp - 0.799"/0.899" ID		
24	5650529	Clamp - Expansion Valve Bulb		
25	3000833	Strap - Expansion Valve Bulb - 0.375"		
26	5202069	Screw - #10-24 x 0.50" HEX		
27	6063439	Left Corner Post		
28	6068649	Left Top Channel		
29	6063581	Right Corner Post		
30	6071451	Right Top Channel		
31	000010896	Insulated Tube		[7]
31a	5650603	Snap Clamp - 1.0" ID		
31b	5650703	Snap Clamp - 0.799"/0.899" ID		
32	4010439	Tubing - Water Inlet Valve		[8]
33	5005319	Connector		
34	6058459	Water Dump Valve Mounting Bracket		
35	000002472	Check Valve Replacement		[9]
36	2006559	Water Level Probe Holder		
36a	5202069	Screw - #10-24 x 0.50" HEX		[10]

PART NOTES:

[1] - \pages from 000005156_02.jpg" width=280 height=256>
[2] - \pages from 000005156_02.jpg" width=266 height=183>
[3] - Before Serial Number 110667970
[4] - After Serial Number 110667970
[5] - \pages from 400720_08.jpg" width=923 height=583>
[6] - 3.25 inches
[7] - vinyl tubing from distribution tube to water pump & dump valve
[8] - \pages from 401043_05.jpg" width=1797 height=2238>
[9] - includes water diverter, vinyl tubing & insulation
[10] - mounts Water Level Probe Holder

S0420 REFRIGERATION COMPARTMENT - AIR-COOLED COMPONENTS

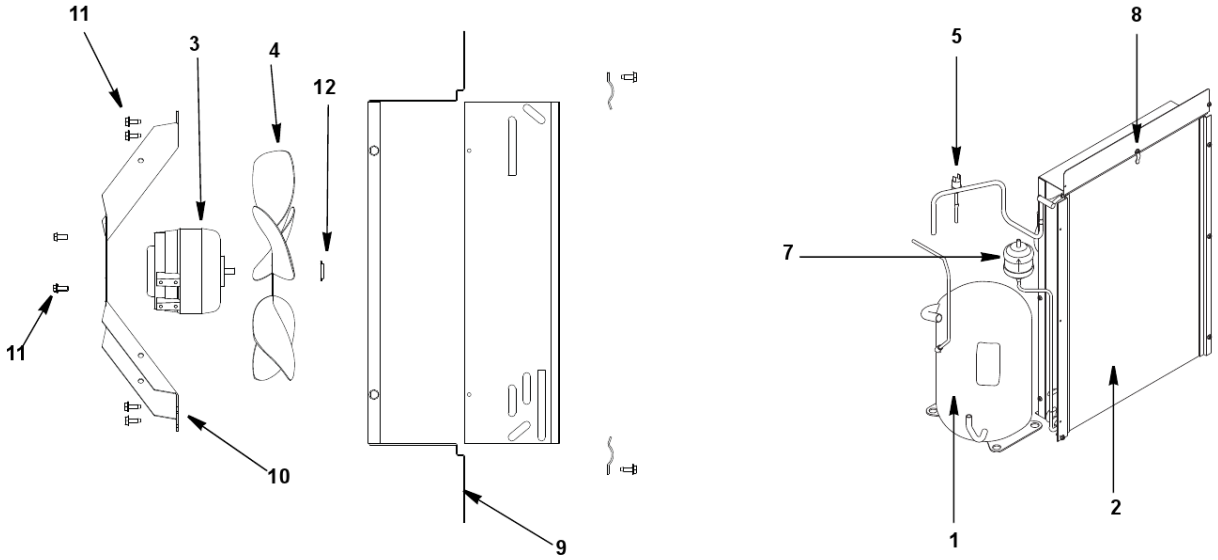

S0420 REFRIGERATION COMPARTMENT - AIR-COOLED COMPONENTS

#	PART #	DESCRIPTION	QTY	Note
1	See S0420 Common Components	Compressor		[1]
2	8252129	Air Condenser		
3		Fan Motor		
3a	2412929	Fan Motor 115V/60 Hz/1 Ph		
3b	2412939	Fan Motor 208-230V/50-60 Hz		
4	2416203	Fan Blade		
5	2001263	Fan Cycling Control - 200-250 psig		[2]
6	3005939	Air Filter		
7	8930259	Drier		
8	5650699	Air Filter Clip		
9	6061689	Fan Shroud		
10	6061869	Fan Motor Bracket		
11	5202069	Screw - #10-24 x 0.50" HEX		
12	5429139	Hexnut #8-32		

PART NOTES:

[1] - Refer to COMMON PARTS Page

[2] - \pages from 200126_09.jpg" width=150 height=306>

S0420 REFRIGERATION COMPARTMENT - WATER-COOLED COMPONENTS

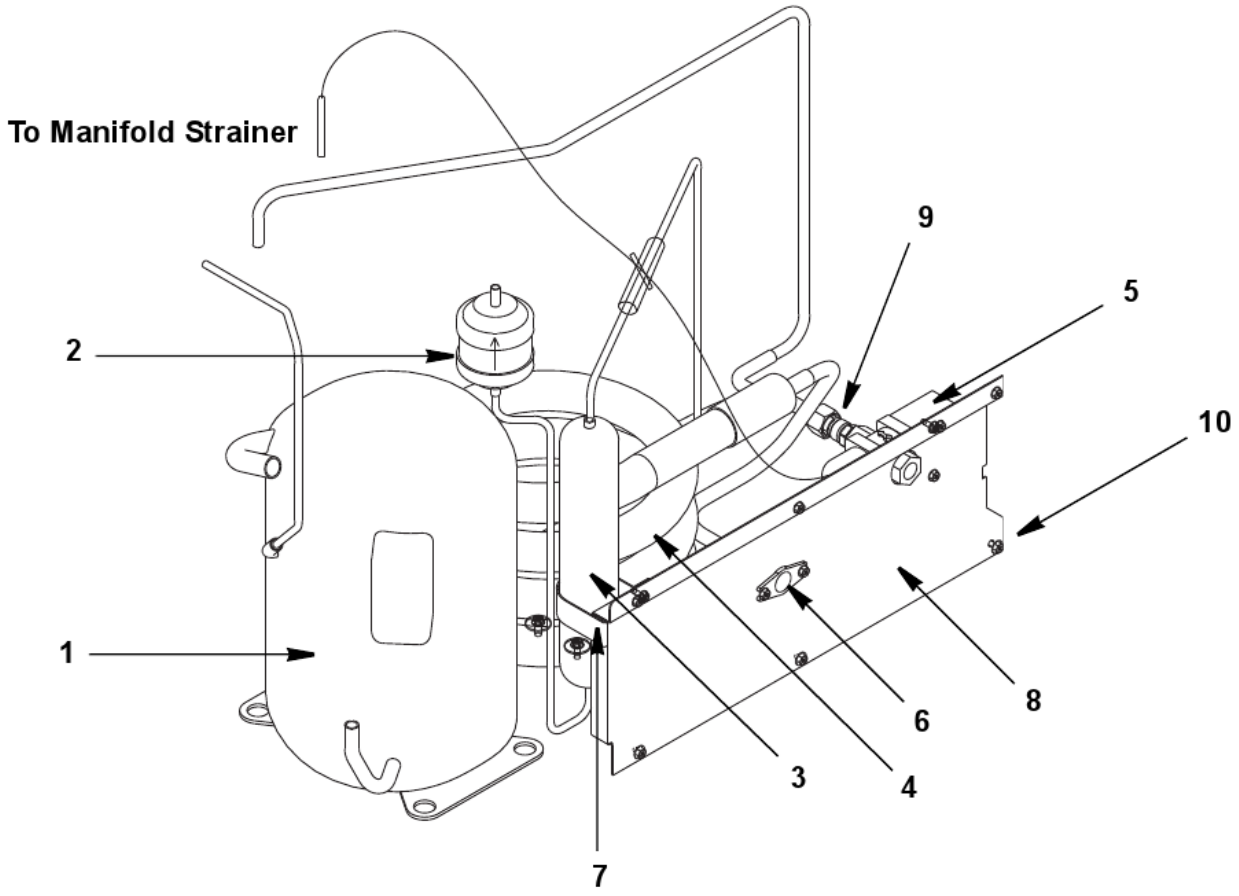

S0420 REFRIGERATION COMPARTMENT - WATER-COOLED COMPONENTS

#	PART #	DESCRIPTION	QTY	Note
1		Compressor		[1]
2	8930259	Drier		
3	000008892	Receiver		
4	000000046	Water-cooled Condenser		
5	8372069	Water Regulating Valve		
5a	000007553	High Pressure Water Regulating Valve		
6	8706103	Female Wing Adapter - 0.50"		
7	6000541	Receiver Strap		
8	6063669	Back Panel		
9	5002159	Elbow 3/8 MF x 3/8 MPT		
10	5202069	Screw - #10-24 x 0.50" HEX		
11	5573419	Washer		
12	6058659	Base, Water Condenser/Receiver		

PART NOTES:

[1] - Refer to COMMON PARTS Page

S0420 PANELS

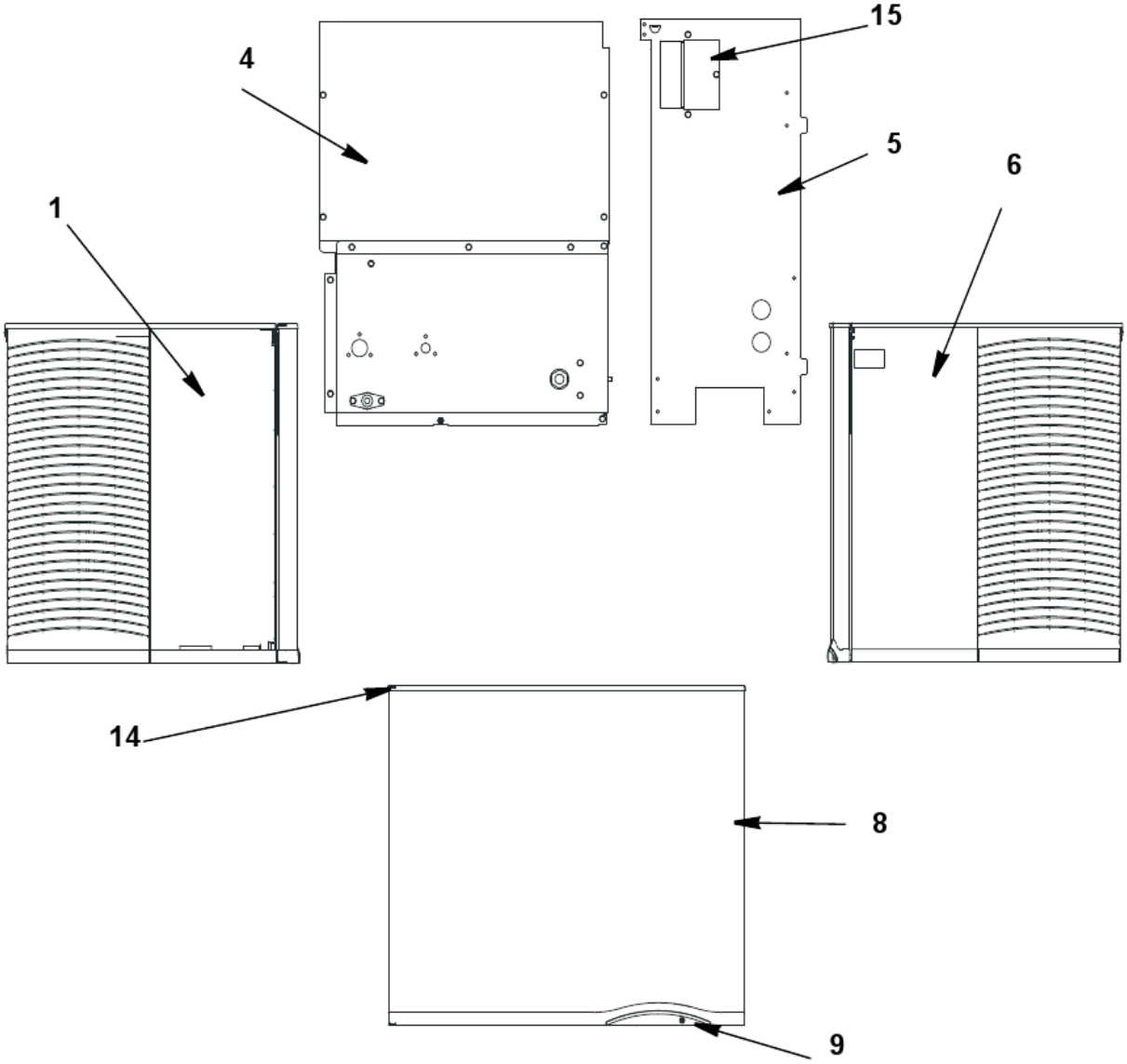

S0420 PANELS

#	PART #	DESCRIPTION	QTY	Note
1	6060539	Left Side Panel		
2	6060779	Air Baffle		
3	3005939	Air Filter		
4	6063699	Back Panel - Water-cooled		
5	6063609	Back Panel - Air-cooled		
6	6060529	Right Side Panel		
7	4012029	Top Cover		
8	6063449	Front Door		
9	5004899	Front Door Screw		
10		Front Door Endcaps		
10a	4011903	Front Door Endcaps Top		
10b	4011893	Front Door Endcaps Bottom		
11	3005739	Front Top Support		
11a	5005379	Mounting Screw - #8-32 x 1" PHIL		
11b	5005099	Mounting Screw - #10-16 x 0.625" PHIL		
12	3006029	Front Panel Strike		
13	7602829	Bottom Door Frame		
13a	5005379	Mounting Screw - #8-32 x 1" PHIL		
13b	5202099	Screw - #10-24 x 0.50" PHIL		
14	4012659	Door Catch Bracket		
14a	5004899	Front Door Screw		
15	3005579	Left Door Pivot Leaf Hinge		[1]
15a	5005379	Mounting Screw - #8-32 x 1" PHIL		
16	6063999	Electrical Connection Box Cover		
17	4004593	Sachet Holder		[2]
17a	5004799	Thumbscrew SS - #8-32 x 0.375"		
18	7112319	Cartoning		

PART NOTES:

[1] - Top or Bottom
[2] - Inside Left Door