Manitowoc

Foodservice

Parts Manual

For more Parts Information:
https://manitowocfsg.sysonline.com/Default.aspx

TABLE OF CONTENTS

Manitowoc Foodservice [Updated: Sep. 30, 2013]
Manitowoc - Ice & Related
Parts Catalog
Ice Machine
S Series
S Model - Air, Water & Remote
S0320
S0320 Control Box Components 1
S0320 Evaporator Compartment 3
S0320 Refrigeration Compartment - Common Components 5
S0320 Refrigeration Compartment - Air-cooled Components 8
S0320 Refrigeration Compartment - Water-cooled Components 10
S0320 Panels 12

S0320 CONTROL BOX COMPONENTS

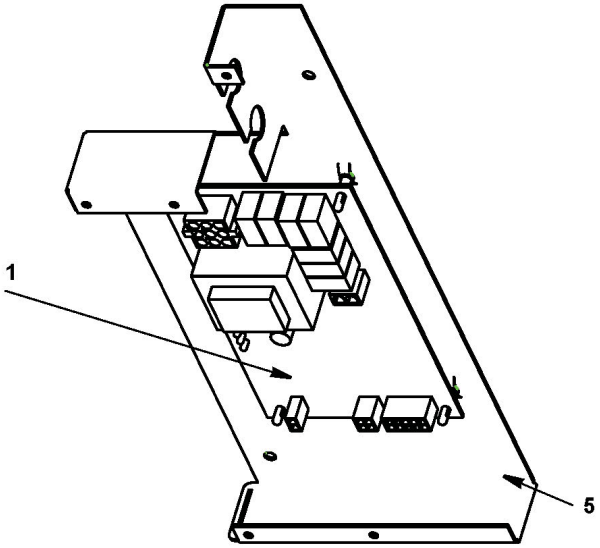

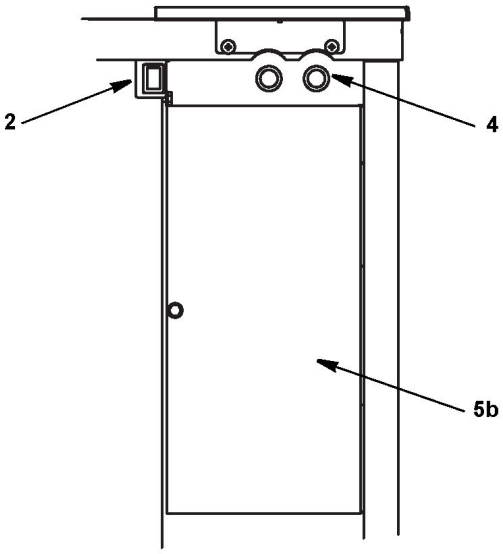

S0320 CONTROL BOX COMPONENTS

#	PART #	DESCRIPTION	QTY	Note
1	2006199	Control Board		
1a	000008240	7 Amp Fuse - Mounted on Control Board		
2	2007939	Toggle Switch		
2a	2008079	Toggle Switch Wiring Harness		
2b	4011639	Toggle Switch Box		
3		Contactor		
3a	2006589	Contactor - 115V/60 Hz/1 Ph		
3b	2006599	Contactor - 230V/50-60 Hz/1 Ph		
4	8373263	Refrigeration Service Valve Assembly		
5	6063909	Control Box		
5a	7602739	Control Box Side Cover		
5b	7602153	Control Box Cover		
6	4302253	Control Board Mounting Supports		
7	2500169	Bushing - 0.91" OD x 0.44" ID		
8	6063949	Start Components Electrical Box		
9	5005309	Capacitor Mounting Bracket		
10	5202169	Screw - #10-24 x 0.50" Ground		
10a	5573209	Star Washer		
11	5202069	Screw - #10-24 x 0.50" HEX		
12		Control Box Wiring Harness		
12a	2008739	Control Box Wiring Harness - 115V/60 Hz/1 Ph		
12b	2008749	Control Box Wiring Harness - 230V/60 Hz/1 Ph		
12c	2008759	Control Box Wiring Harness - 230V/50 Hz/1 Ph		

S0320 EVAPORATOR COMPARTMENT

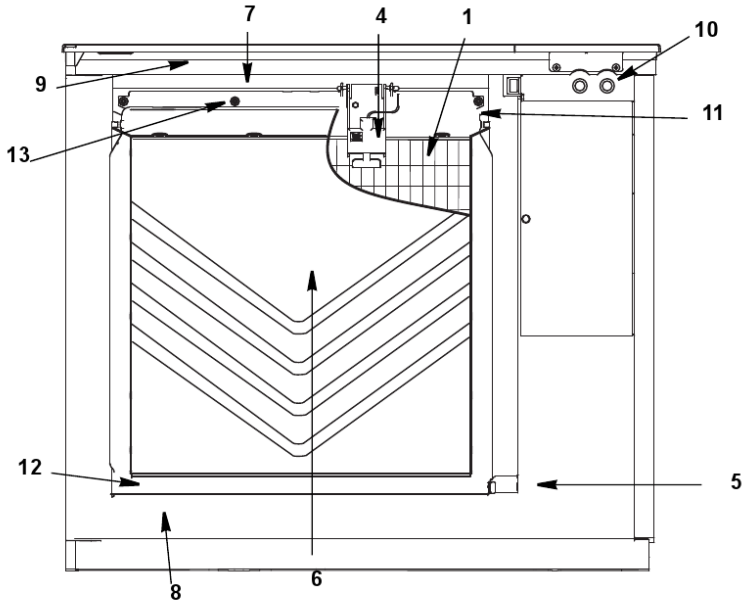

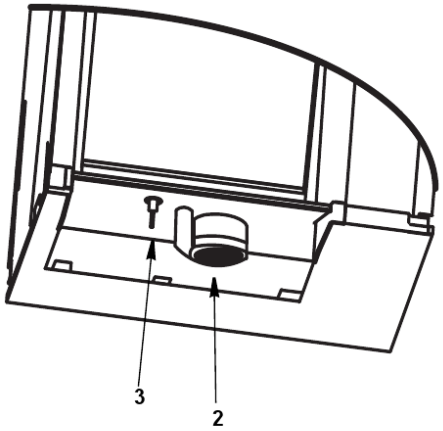

S0320 EVAPORATOR COMPARTMENT

#	PART #	DESCRIPTION	QTY	Note
1		Evaporator Assembly		
1a	7602769	Evaporator - Dice Cube		
1b	7602759	Evaporator - Half Dice Cube		
2		Water Pump		
2a	2008929	Water Pump - 115V/60 Hz		
2b	2008939	Water Pump - 230V/60 Hz		
2c	2008949	Water Pump - 230V/50 Hz		
3	2006549	Water Level Probe		
3a	2007989	Wire - Control Box to Probe		
4	2008029	Ice Thickness Control Probe		
5	000007888	Magnetic Bin Switch		
6	4011189	Water Curtain		
7	7602789	Water Distribution Tube - 22" Models		
7a	5004649	O-Rings		[1]
8	4009149	Water Trough - without Tabs		[2]
9	6065389	Evaporator Top Filler Panel		
9a	6063339	Bracket - Top Filler Panel		
9b	5202099	Screw - #10-24 x 0.50" PHIL		
10	8373263	Refrigeration Service Valve Assembly		
11	7602799	Evaporator Top Frame Assembly		
12	7602779	Water Diverter - 22" Models		
12a	5305123	Thumbscrew SS - #8-32 x 0.44"		
13	5004799	Thumbscrew SS - #8-32 x 0.375"		[3]
13a	5004629	O-Ring - 0.125" ID		
14	5004619	Screw - #12-16 x 0.687"		[4]
15	5004659	Water Pump Base O-Ring - 4.00" ID		
16	5004679	Water Pump Outlet O-Ring - 0.875" ID		
17	000001382	Vinyl Tubing 0.625" ID		[5]
17a	6038831	Insulation 0.88 ID X 0.25W X 13.50L		

PART NOTES:

[1] - Back of Distribution Assembly
[2] - \water trough.jpg" width=311 height=143>
[3] - Water Distribution Tube Mounting
[4] - Used to Mount Evaporator
[5] - dump valve to drain adapter

S0320 REFRIGERATION COMPARTMENT - COMMON COMPONENTS

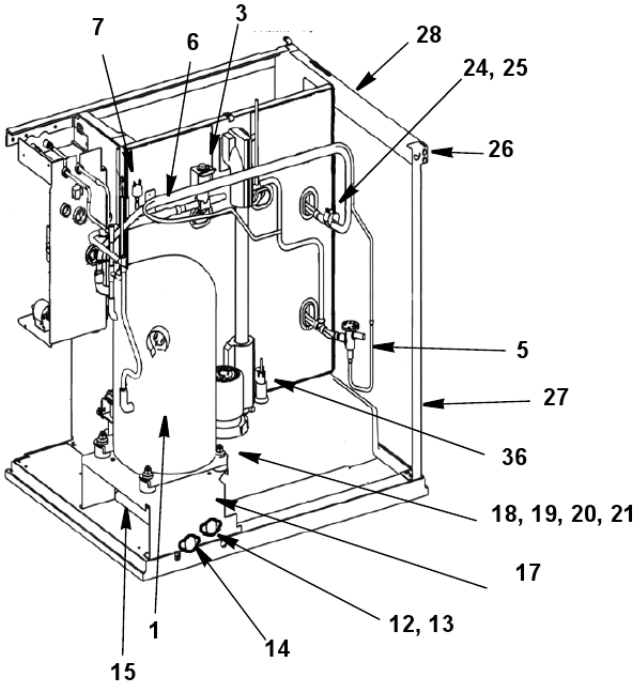

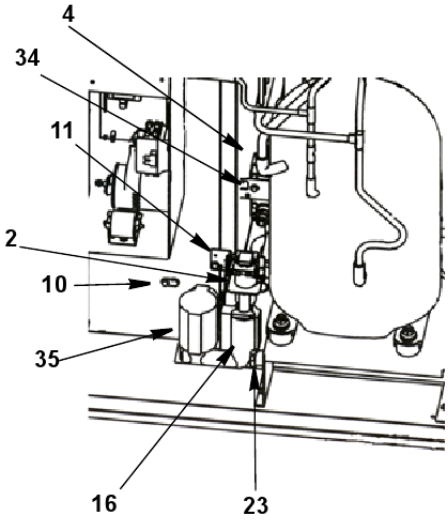

S0320 REFRIGERATION COMPARTMENT - COMMON COMPONENTS

#	PART #	DESCRIPTION	QTY	Note
1		Compressor		
1a	7601343	Compressor - Danfoss - 115V/60 Hz/1 Ph		
1b	7601353	Compressor - Danfoss - 208-230V/50-60 Hz/1 Ph		
2		Water Dump Valve		
2a	000001767	Water Dump Valve - 115V/60 Hz		
2b	000001768	Water Dump Valve - 208-230V/50-60 Hz		
3		Harvest Valve Including Electrical Coil		
3a	7630011	Danfoss Solenoid Valve With Coil - 115V/60 Hz		
3b	7630071	Danfoss Solenoid Valve With Coil - 208-230V/50-60 Hz		
		Harvest Valve Coil Only		
3c	000005156	Danfoss Solenoid Valve Coil Only - 115V/60 Hz		[1]
3d	000005157	Danfoss Solenoid Valve Coil Only - 230V/50-60 Hz		[2]
4		Water Inlet Valve with Coil		
4a	000000375	Water Inlet Valve - 115V/60 Hz/1 Ph		
4b	000000376	Water Inlet Valve - 208-230V/50-60 Hz		
5		Expansion Valve		
5a	7602903	Expansion Valve		[3]
5b	7602893	Expansion Valve		[4]
5c	4000363	Valve Insulation Boot - Body		
5d	4007203	Valve Insulation Boot - Bulb		[5]
6	000008364	Manifold Strainer		[6]
7	2001243	High Pressure Cut-out Control		[7]
8		Electrical Box on Rear of Ice Machine		
8a	6063949	Start Components Electrical Box		
8b	2006143	Terminal Block - 50 Hz - 3 Pole		
8c	5202169	Screw - #10-24 x 0.50" Ground		
9		Compressor Compartment Wiring Harness		
9a	2007329	Compressor Compartment Wiring Harness - Water-cooled		
9b	2007319	Compressor Compartment Wiring Harness - Air-cooled		
10	000007888	Magnetic Bin Switch		
11	6065039	Dump Valve Mounting Bracket		
11a	5012319	Screw - #12-16 x 0.75"		
11b	5202109	Screw - #10-24 x 0.375"		
12	8706093	Female Wing Adapter - 0.375"		
13	1360961	Male Connector		
14	8706083	Female Wing Adapter - 0.50"		
15	4420383	Clear Tubing - 0.625" ID		[8]
16	4420383	Clear Tubing - 0.625" ID		[9]
17	6060269	Compressor Mounting Base		
18	5000899	Compressor Rubber Grommet		
19	5000909	Sleeve		
20	5004999	Compressor Mounting Screw 1/4-20 x 1 1/4		

S0320 REFRIGERATION COMPARTMENT - COMMON COMPONENTS

#	PART #	DESCRIPTION	QTY	Note
21	5005009	Compressor Mounting Nut		
22	2008769	Compressor Wiring Harness		
23	5650709	Snap Clamp - 0.799"/0.899" ID		
24	5650529	Clamp - Expansion Valve Bulb		
25	3000833	Strap - Expansion Valve Bulb - 0.375"		
26	5202069	Screw - #10-24 x 0.50" HEX		
27	6063439	Left Corner Post		
28	6068649	Left Top Channel		
29	6063589	Right Corner Post		
30	6071451	Right Top Channel		
31	000010896	Insulated Tube		[10]
31a	5650609	Snap Clamp - 1.0" ID		
31b	5650709	Snap Clamp - 0.799"/0.899" ID		
32	4420291	Vinyl Tube - 0.25" OD		
33	5005319	Connector		[11]
34	6058459	Water Dump Valve Mounting Bracket		
35	000002472	Check Valve Replacement		[12]
36	2006559	Water Level Probe Holder		
36a	5202069	Screw - #10-24 x 0.50" HEX		[13]

PART NOTES:

[1] - \pages from 000005156_02.jpg" width=280 height=256>
[2] - \pages from 000005156_02.jpg" width=266 height=183>
[3] - Water-cooled Models
[4] - Air-cooled Models
[5] - \pages from 400720_08.jpg" width=923 height=583>
[6] - in front of hot gas valve
[7] - Auto Reset
[8] - Water Drain Tubing - 12 inches
[9] - Dump Valve Tubing - 3.25 inches
[10] - vinyl tubing from distribution tube to water pump & dump valve
[11] - Water inlet valve
[12] - includes water diverter, vinyl tubing & insulation
[13] - mounts Water Level Probe Holder

S0320 REFRIGERATION COMPARTMENT - AIR-COOLED COMPONENTS

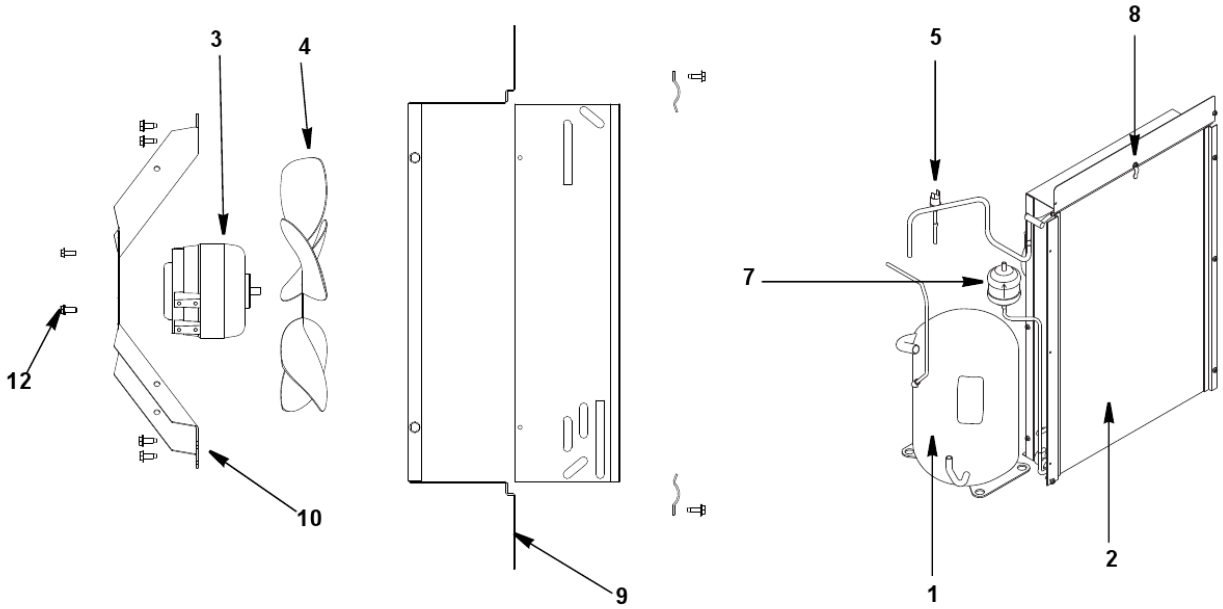

S0320 REFRIGERATION COMPARTMENT - AIR-COOLED COMPONENTS

#	PART #	DESCRIPTION	QTY	Note
1	See S0320 Common Components	Compressor		[1]
2	8851303	Air Condenser		
3		Fan Motor		
3a	2412813	Fan Motor - 115V/60 Hz		
3b	2412823	Fan Motor - 208-230V/50-60 Hz		
4	2416223	Fan Blade		
5	2001263	Fan Cycling Control - 200-250 psig		[2]
6	3005699	Air Filter		
7	8930259	Drier		
8	5650699	Air Filter Clip		
9	6065469	Fan Shroud		
10	6027431	Fan Motor Mounting Bracket		
11	5025599	Screw - #8-36 x 0.375"		
12	5202069	Screw - #10-24 x 0.50" HEX		
13	5475079	Speed Nut - 0.25" x 20		

PART NOTES:

[1] - Refer to COMMON PARTS Page

[2] - \pages from 200126_09.jpg" width=150 height=306>

S0320 REFRIGERATION COMPARTMENT - WATER-COOLED COMPONENTS

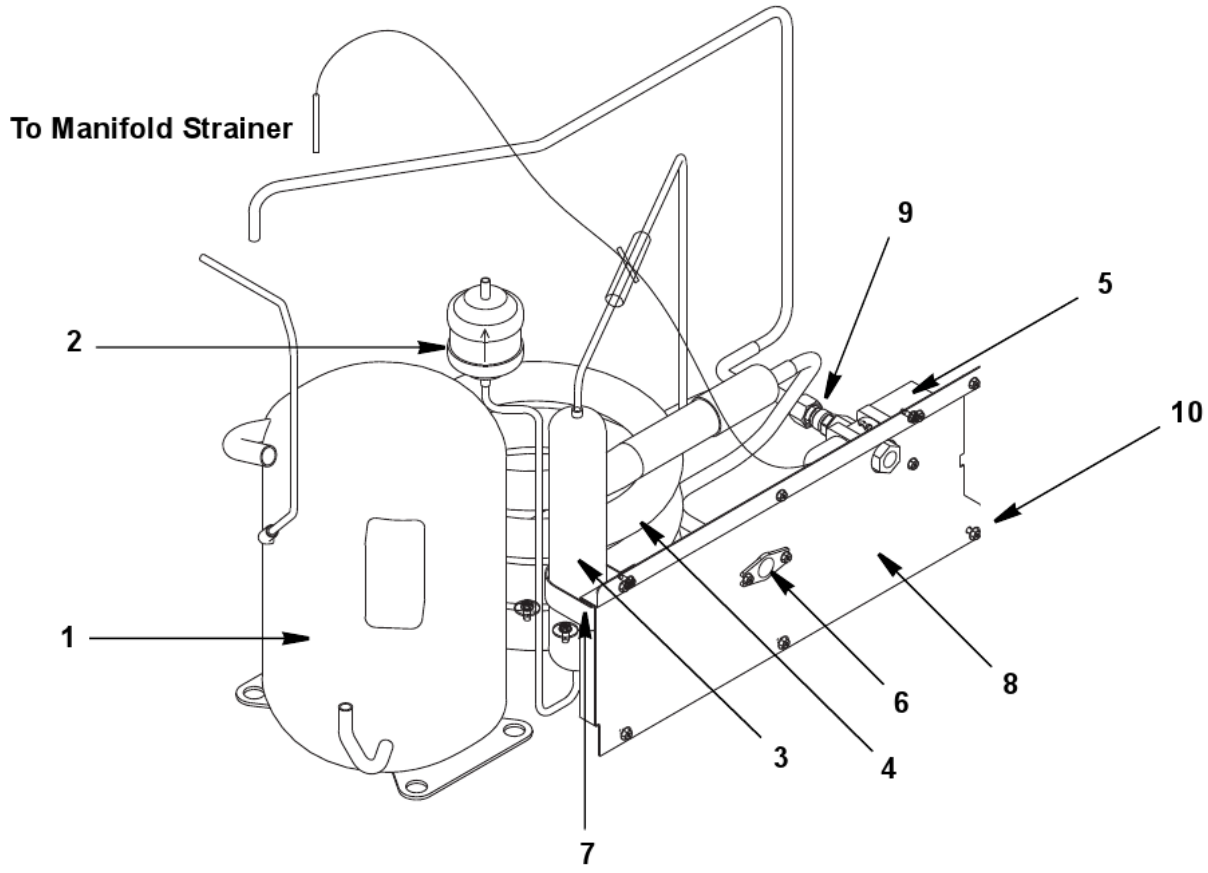

S0320 REFRIGERATION COMPARTMENT - WATER-COOLED COMPONENTS

#	PART #	DESCRIPTION	QTY	Note
1	See S0320 Common Components	Compressor		[1]
2	8930259 000008892	Drier		
3	000000045 8372069	Receiver		
4	000007553 8706103	Water-cooled Condenser		
5	6000541	Water Regulating Valve		
5a	6063669	High Pressure Water Regulating Valve		
6	5002159	Female Wing Adapter - 0.50"		
7	5202069	Receiver Strap		
8	5573419	Back Panel		
9	6058659	Elbow 3/8 MF x 3/8 MPT		
10		Screw - #10-24 x 0.50" HEX		
11		Washer		
12		Base, Water Condenser/Receiver		

PART NOTES:

[1] - Refer to COMMON PARTS Page

S0320 PANELS

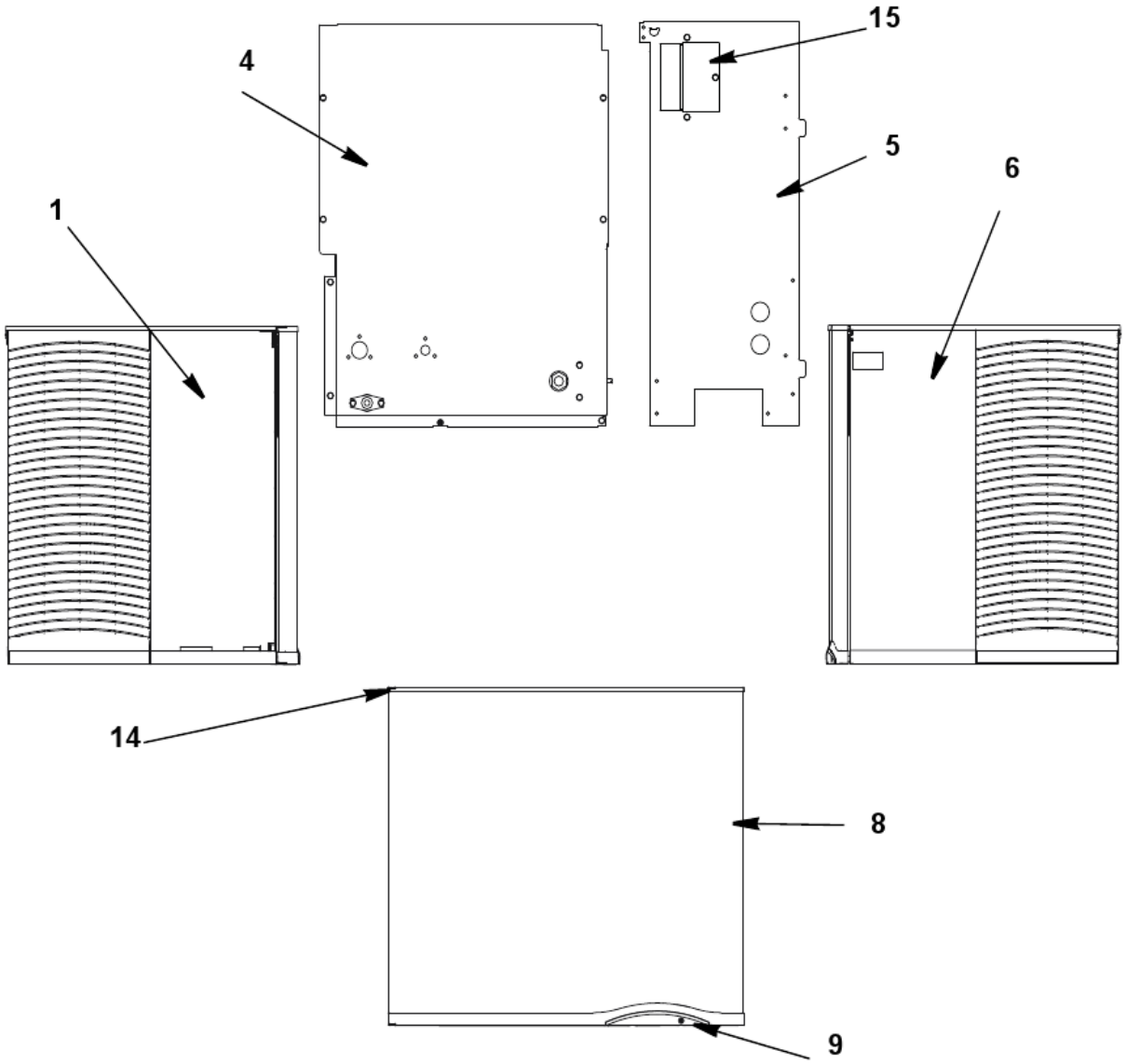

S0320 PANELS

#	PART #	DESCRIPTION	QTY	Note
1	6060539	Left Side Panel		
2	6060779	Air Baffle		
3	3005699	Air Filter		
4	6063699	Back Panel - Water-cooled		
5	6063609	Back Panel - Air-cooled		
6	6060529	Right Side Panel		
7	4012029	Top Cover		
8	6063449	Front Door		
9	5004899	Front Door Screw		
10		Front Door Endcaps		
10a	4015883	Front Door Endcaps - Top		
10b	4015863	Front Door Endcaps - Bottom		
11	3005739	Front Top Support		
11a	5005379	Mounting Screw - #8-32 x 1" PHIL		
11b	3006029	Front Panel Strike		
12	7602829	Bottom Door Frame		
12a	5005099	Mounting Screw - #10-16 x 0.625" PHIL		
12b	5202099	Screw - #10-24 x 0.50" PHIL		
13	4012659	Door Catch Bracket		
13a	5004899	Front Door Screw		
14	3005579	Left Door Pivot Leaf Hinge		[1]
14a	5005379	Mounting Screw - #8-32 x 1" PHIL		
15	6063999	Electrical Connection Box Cover		
16	4004593	Sachet Holder		[2]
16a	5004799	Thumbscrew SS - #8-32 x 0.375"		
17	7112319	Cartoning		

PART NOTES:

[1] - Top or Bottom
[2] - Inside Left Door